Concern Resolution Process for In-house Manufacturing

QC Story

QC STORY PROJECT

PROJECT TITLE :-

Reduction of uneven Gap Front door to rear door And Rear door to 'C' pillar LH/RH side by 80% at final body buyoff

Mahindra and Mahindra Ltd,Nasik Plant1, Scorpio Body Shop.

	Plan	Actual
Start Date	**13/07/12**	**15/7/12**
Completion Date	**15/10/12**	**26/10/12**

Current Status: completed

Phase II – QC Story

- Team Information
- Step1: Select the Theme
- Step 2: Justify the choice
- Step 3: Understand the current situation
- Step 4: Select Targets
- Step 5: Analysis (Level 1 Analysis)
- Step 6: Implement corrective measures
- Step 7: Confirm the Effects
- Step 8: Standardise
- Step 9: Summarise & Plan future actions
- Guidelines to user

Cross Functional Team

No	Description	Name	Designation	Dept	Phone	Email
1	**Team Leader**	Jagveer singh	Asst. manager	Scorpio body shop	9011075653	Singh.jagveer @mahindra.com
2	**Mentor**	SAWANT RAJENDRA	L5-Managerial-Sr. Mgr - Production	Scorpio body shop	9850903299	Sawant.rajendra2 @mahindra.com
3	**Member 1**	**GANGURDE M.**	ASST. MANAGER	Scorpio body shop	9922644399	GANGURDE. MANGESH1@ mahindra.com
4	**Member 2**	**BHAT VIVEK**	DEPUTY MANAGER	Scorpio body shop	9922438403	BHAT.VIVEK@ mahindra.com
5	**Member 2**	**S R KHANDRE**	Permanent Operator	Scorpio body shop	8975581417	

1. Select the Theme

Brief description of Problem

What- Uneven Gap front door to rear door & Rear door to 'C' Pillar LH/ RH side.

Where- Doors (closure) fitment stage

Who- Concern Reported by Stage operator , Check Man, & Buy off operator.

When- Daily (All The shifts)

Why- Root cause not known

How- Avg. 23 % in last 8 month from Nov.2011 To June 2012

2. Justify the choice (reasons)

Data from Nov 11 to June 12

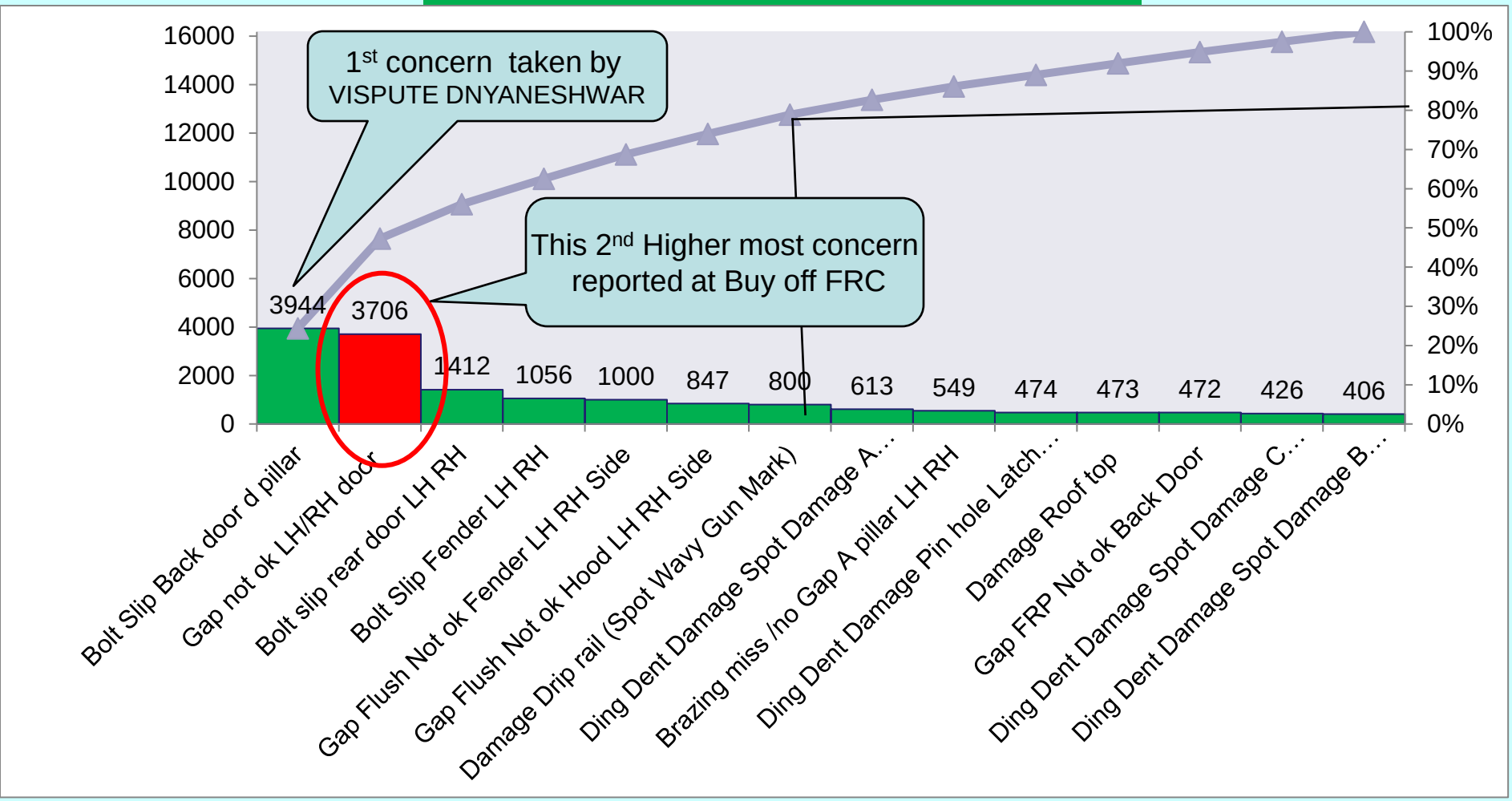

2.a Immediate Containment Action

In order to ensure customer protection we have started to check 100% gap at our buyoff and rework started for defective bodies

3. Understand the current situation

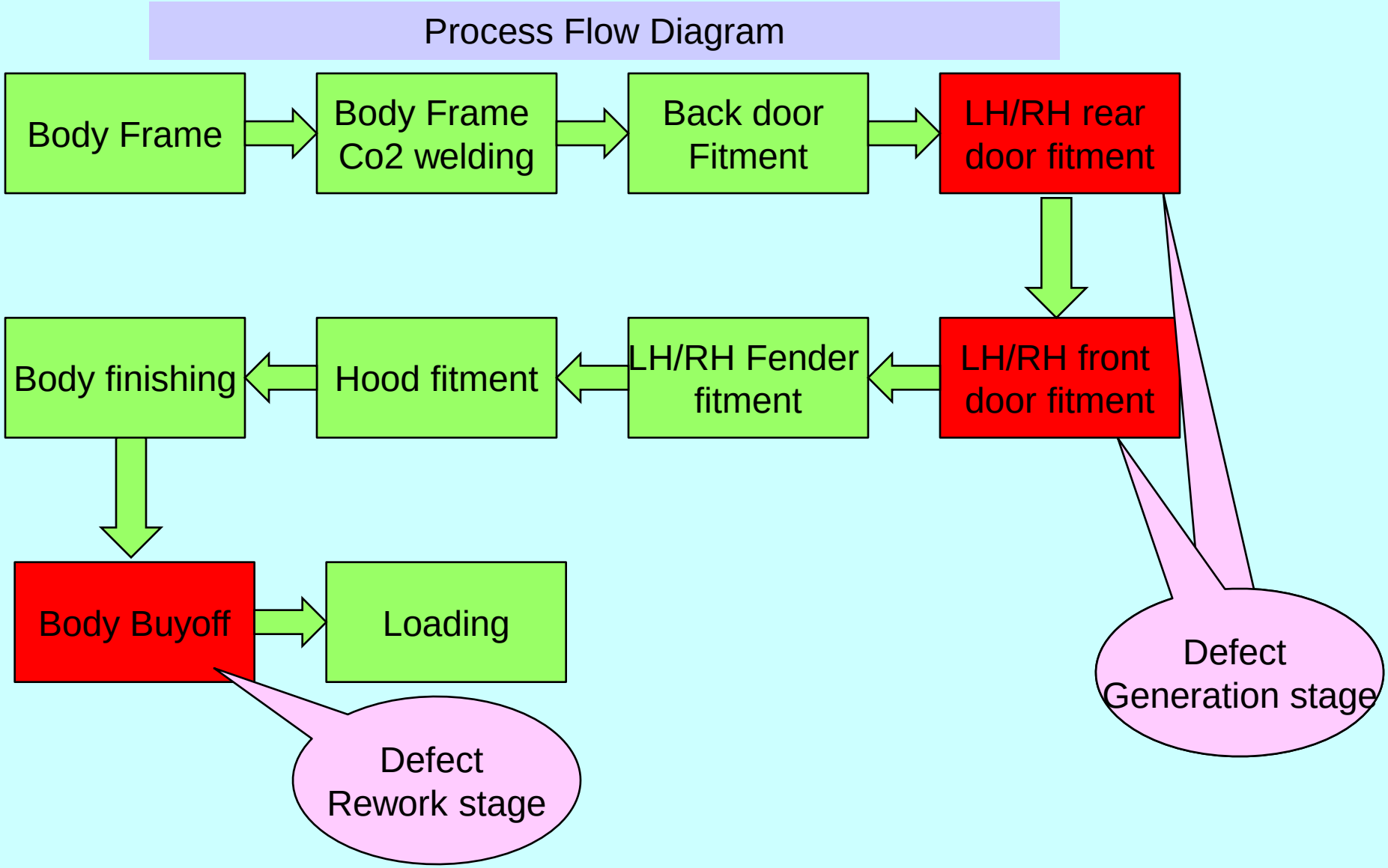

3. Understand the current situation

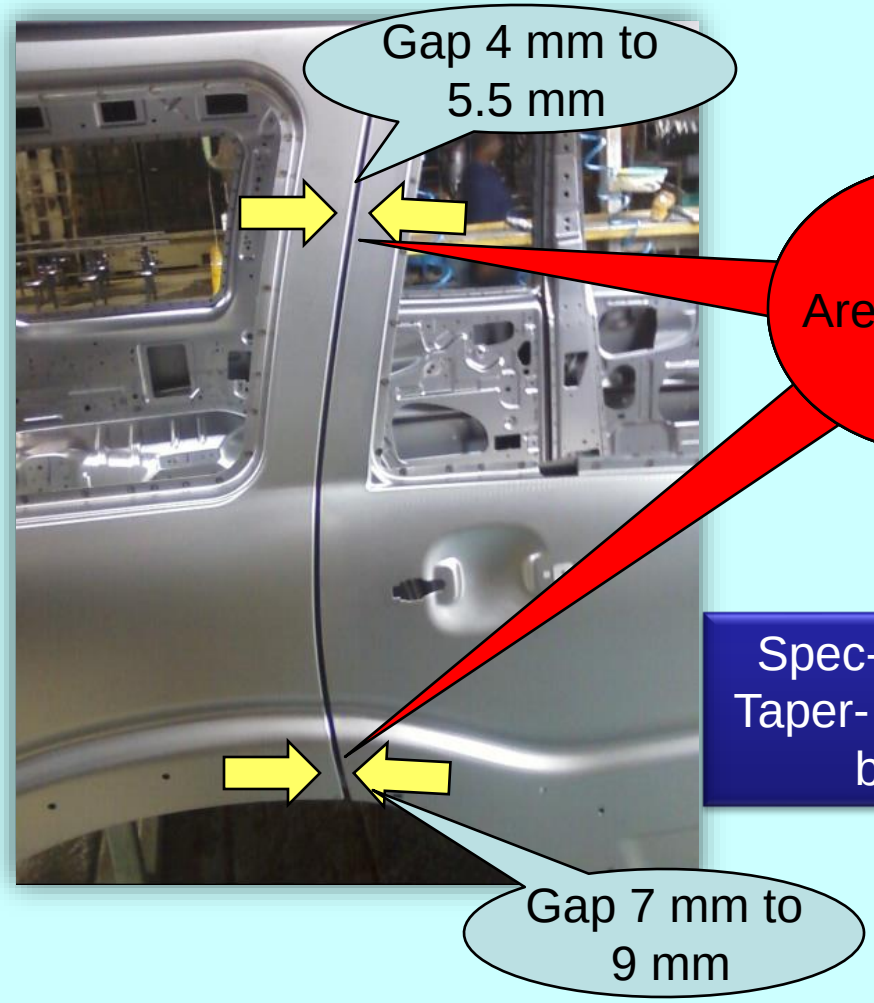

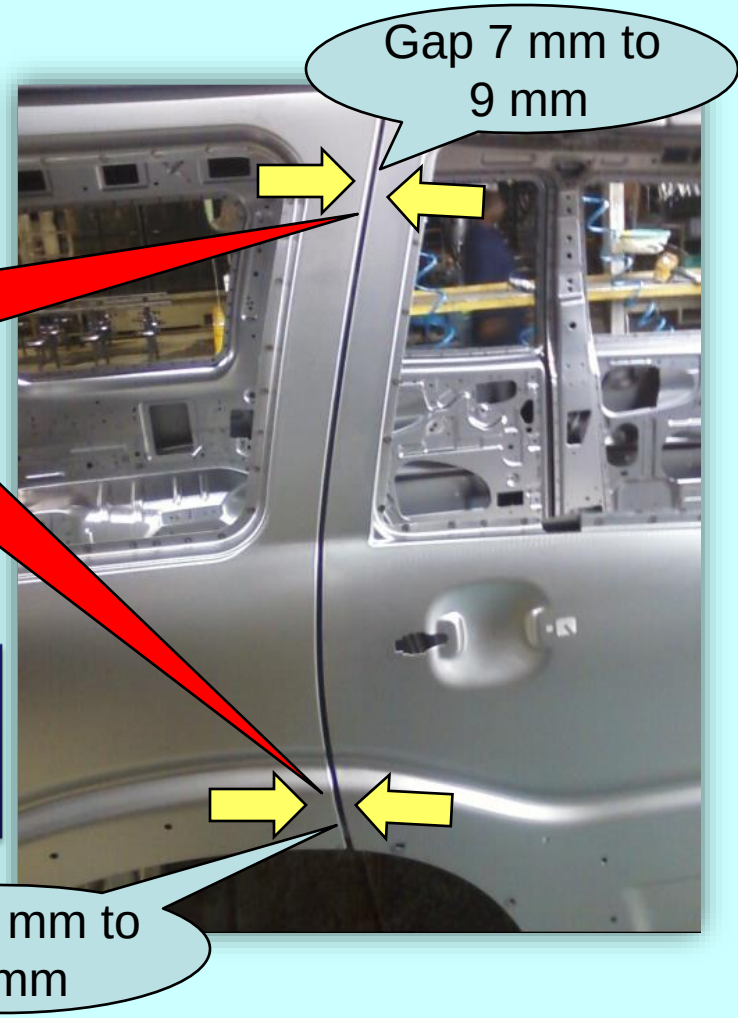

Area of worry

Spec- 6+/-1 mm
Taper- 1mm top to bottom

Rear door to C pillar gap issue

Front to Rear door gap issue

3. Understand the current situation

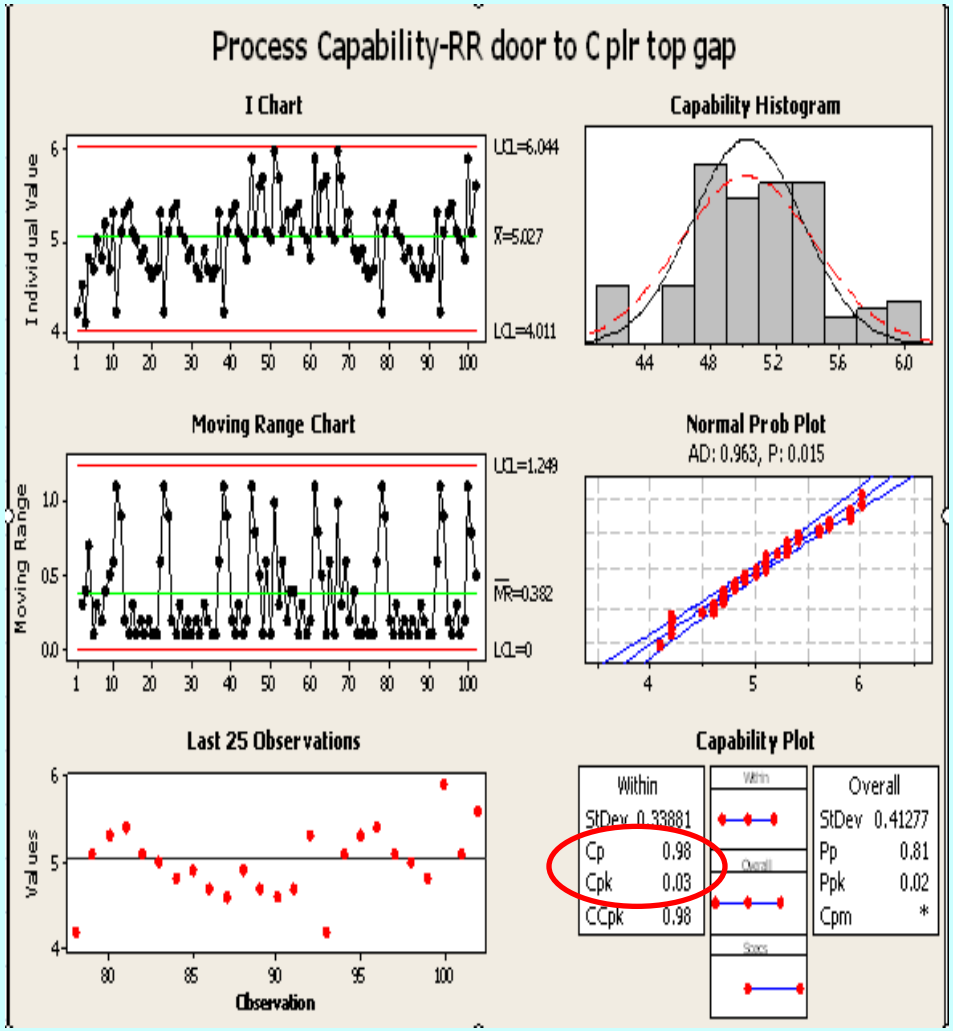

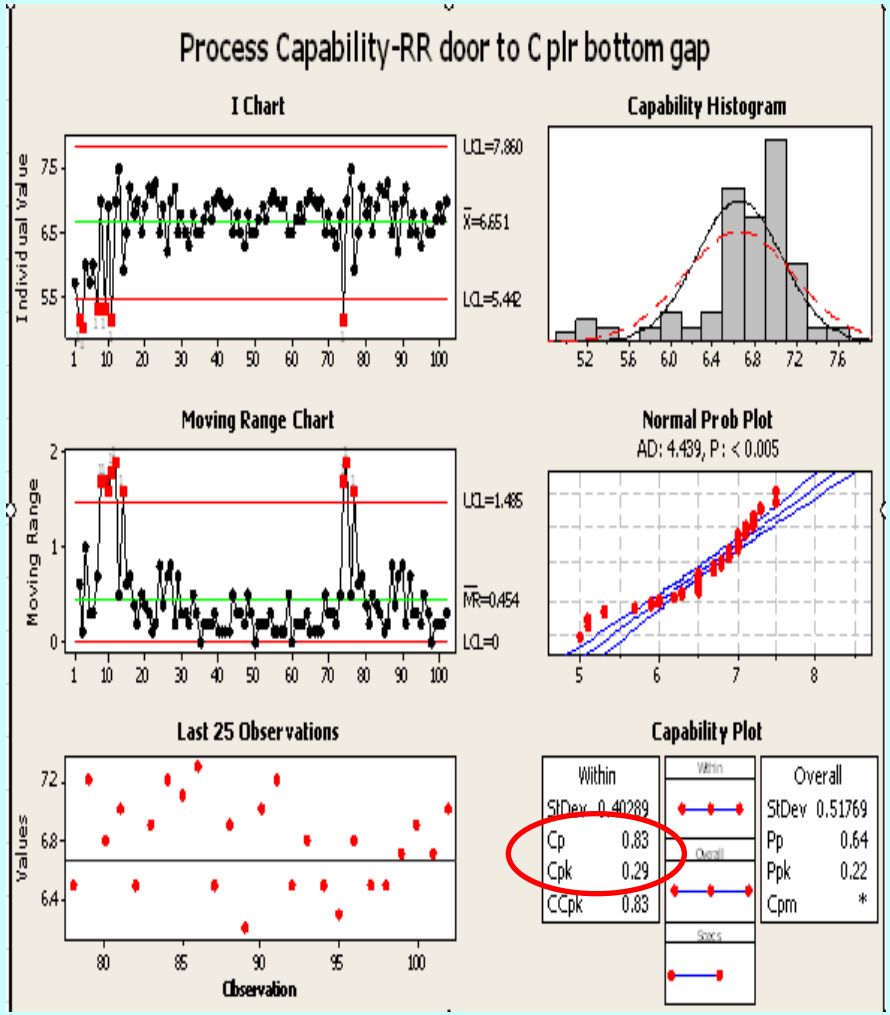

Cp & Cpk Value of Rear door to C plr Top

Cp & Cpk Value of Rear door to C plr Bottom

3. Understand the current situation

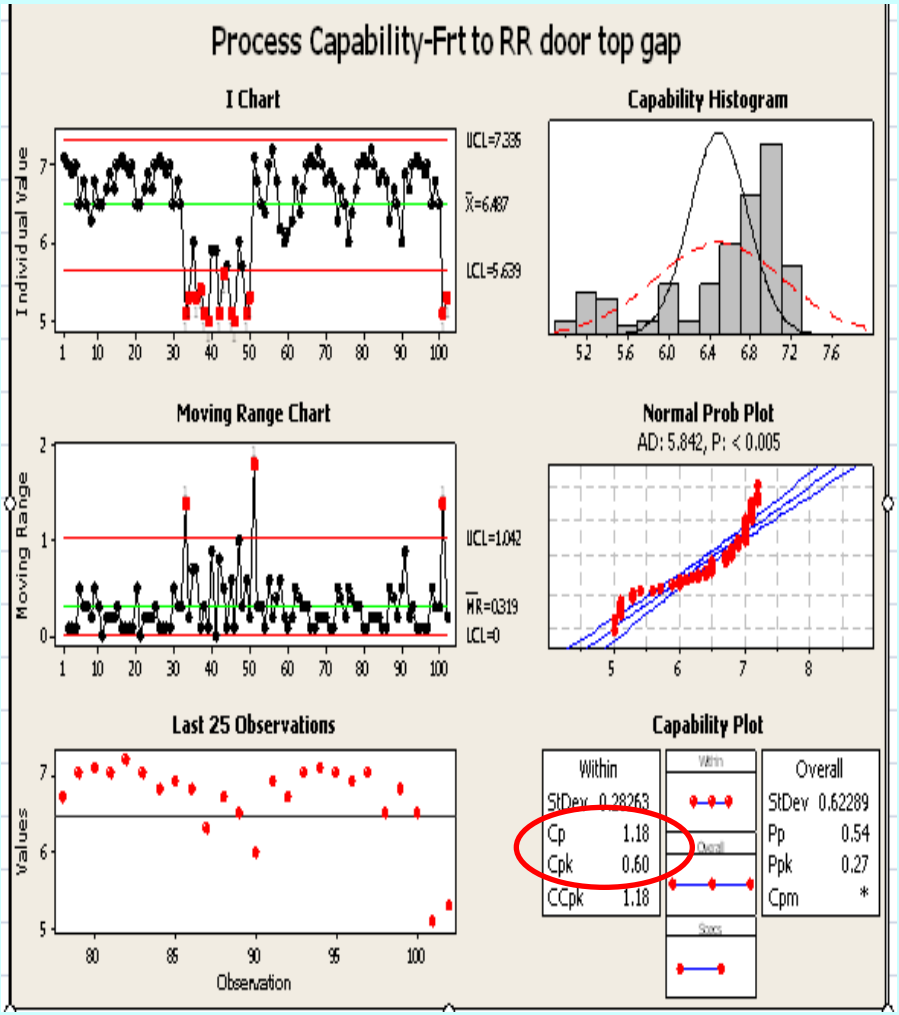

Cp & Cpk Value Frt. to RR door at Top

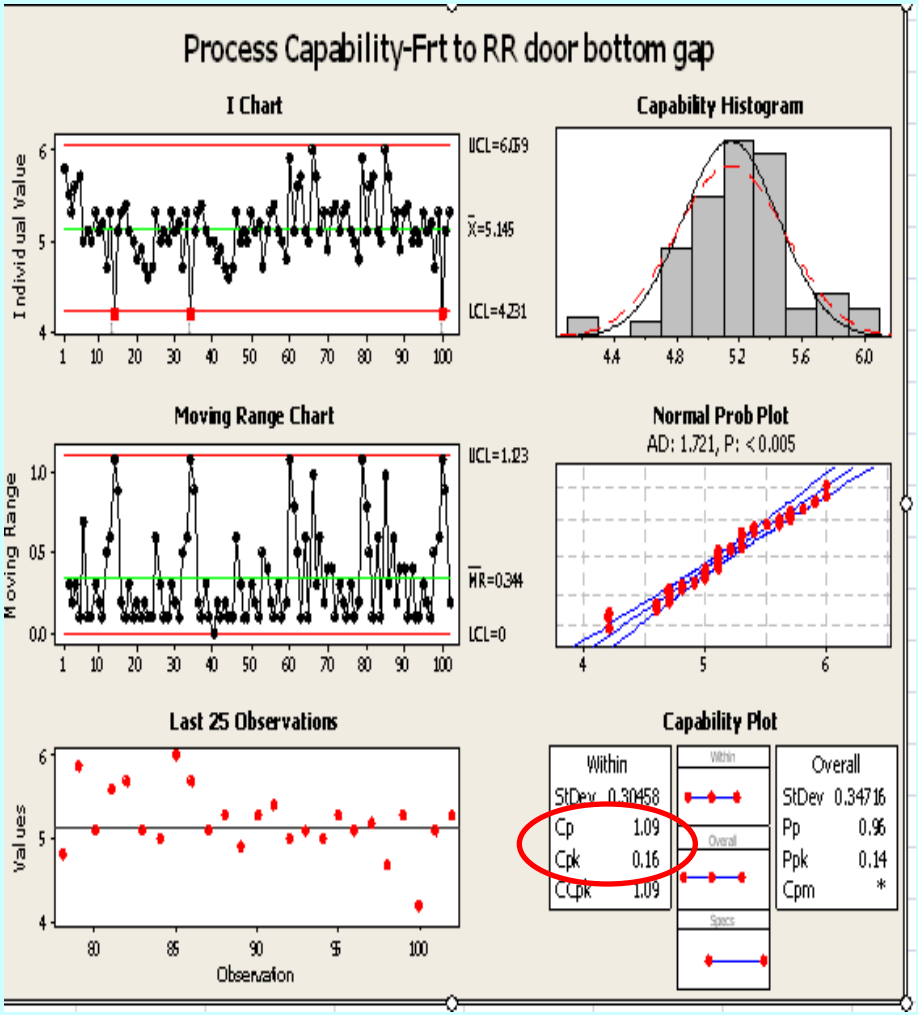

Cp & Cpk Value Frt. to RR door at Bottom

3. Understand the current situation

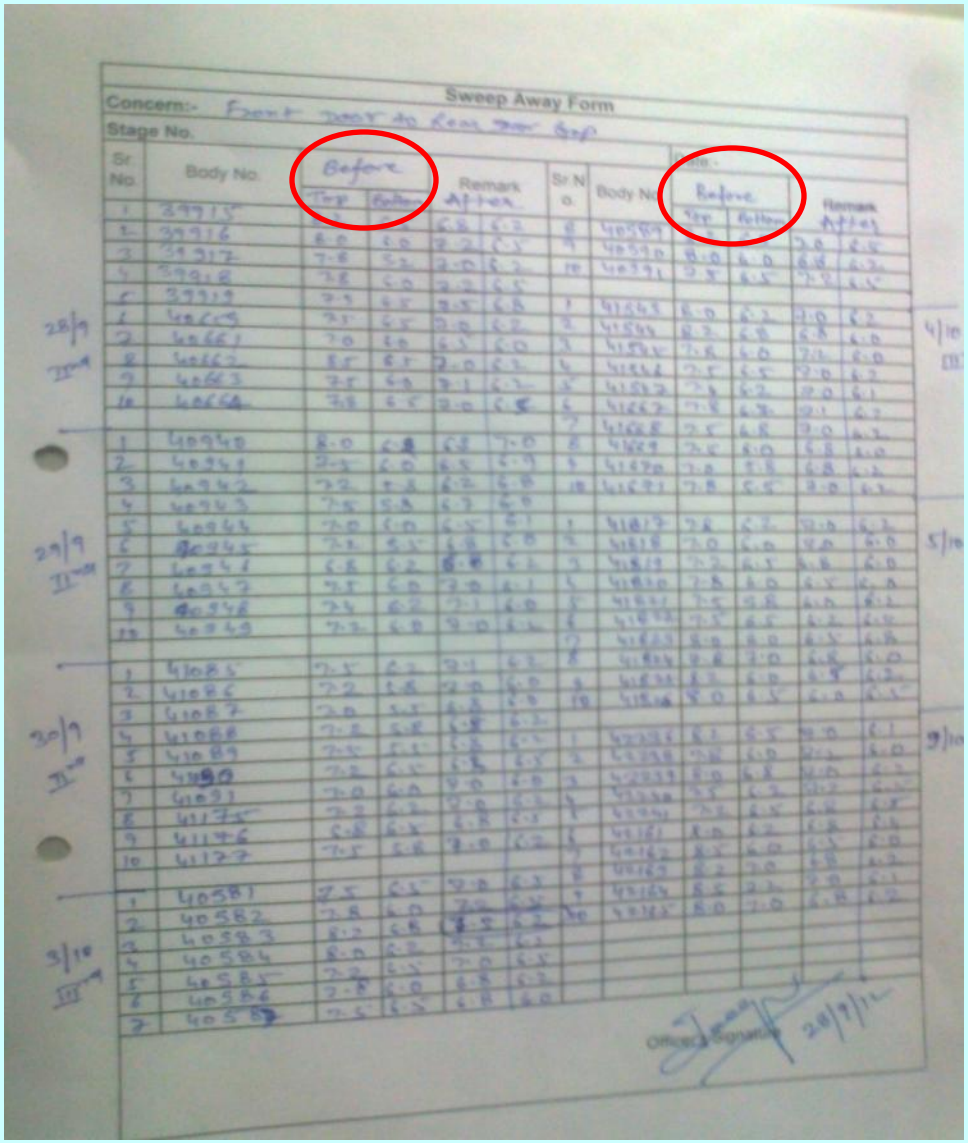

Sweep Away Form

Concern:- Front door to Rear door Gap

Stage No.

Sr. No.	Body No.	Before Top	Before Bottom	Remark After Top	Remark After Bottom	Sr. No.	Body No.	Before Top	Before Bottom	Remark After Top	Remark After Bottom
1	39915										
2	39916	8.0	6.0	6.8	6.2	8	40589				
3	39917	7.8	5.2	7.2	6.5	9	40590	8.0	6.0	7.0	6.5
4	39918	7.8	6.0	7.0	6.2	10	40591	8.5	6.5	7.2	6.2
5	39919	7.9	6.5	7.5	6.5						
6	40659	7.5	6.5	7.5	6.8	1	41568	8.0	6.2	7.0	6.2
7	40661	7.0	6.0	7.0	6.2	2	41569	8.2	6.8	6.8	6.0
8	40662	8.5	6.5	7.0	6.5	3	41571	7.8	6.0	7.2	6.0
9	40663	7.5	6.0	7.1	6.2	4	41572	7.5	6.5	7.0	6.2
10	40664	7.8	6.5	7.0	6.5	5	41573	7.8	6.2	7.0	6.1
						6	41574	7.8	6.7	7.1	6.2
						7	41575	7.5	6.8	7.0	6.2
1	40940	8.0	6.8	6.8	7.0	8	41669	7.5	6.0	6.8	6.0
2	40941	7.5	6.0	6.5	6.9	9	41670	7.0	7.8	6.8	6.2
3	40942	7.2	7.8	6.2	6.8	10	41671	7.8	6.5	7.0	6.2
4	40943	7.5	5.8	6.7	6.0						
5	40944	7.0	6.0	6.5	6.1	1	41817	7.8	6.2	7.0	6.2
6	40945	7.8	5.5	6.8	5.8	2	41818	7.0	6.0	7.0	6.0
7	40946	6.8	6.2	6.8	6.2	3	41819	7.2	6.5	6.8	6.0
8	40947	7.5	6.0	7.0	6.1	4	41820	7.8	6.0	6.5	6.0
9	40948	7.4	6.2	7.1	6.0	5	41821	7.5	5.8	6.0	6.2
10	40949	7.2	6.8	7.0	6.2	6	41822	7.5	6.5	6.2	6.5
						7	41823	8.0	6.0	6.5	6.8
						8	41824	7.8	7.0	6.8	6.0
1	41085	7.5	6.2	7.1	6.2	9	41825	8.2	6.0	6.5	6.2
2	41086	7.2	6.8	7.0	6.0	10	41826	8.0	6.5	6.0	6.5
3	41087	7.0	5.5	6.8	6.0						
4	41088	7.8	6.8	6.8	6.2						
5	41089	7.5	6.1	6.8	6.5	1	42328	8.1	6.5	7.0	6.1
6	41090	7.2	6.5	6.8	6.5	2	42329	7.8	6.0	7.2	6.0
7	41091	7.0	6.0	7.0	6.0	3	42330	8.0	6.8	7.0	6.2
8	41175	7.2	6.2	7.0	6.3	4	42331	7.5	6.2	7.2	6.2
9	41176	6.8	6.2	6.8	6.5	5	42332	7.2	6.5	6.8	6.5
10	41177	7.5	6.8	7.0	6.2	6	43161	8.0	6.2	6.8	6.2
						7	43162	8.5	6.0	6.5	6.0
						8	43163	8.2	7.0	7.8	6.2
1	40581	7.5	6.5	7.0	6.2	9	43164	8.5	7.2	7.0	6.1
2	40582	7.8	6.0	7.2	6.5	10	43165	8.0	7.0	6.8	6.2
3	40583	8.2	6.8	6.5	6.2						
4	40584	8.0	6.2	7.5	6.2						
5	40585	7.2	6.5	7.0	6.5						
6	40586	7.8	6.0	6.8	6.3						
7	40587	7.5	6.5	6.8	6.0						

28/9 II-nd

29/9 II-nd

30/9 II-nd

3/10 III-rd

4/10 III

5/10

9/10

Officer Signature 28/9/12

Process Flow of Rear Door fitment

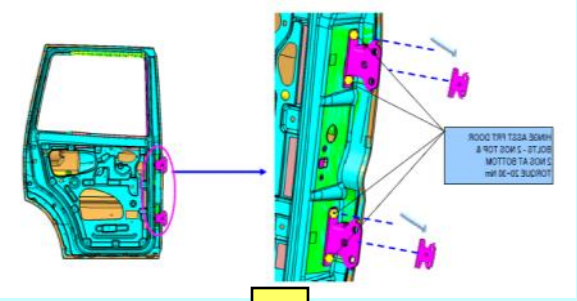

LH Rear door with Hinge assy

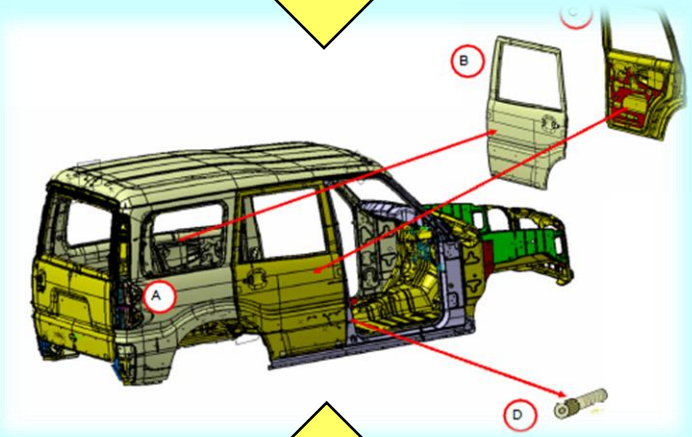

Main Body Frame

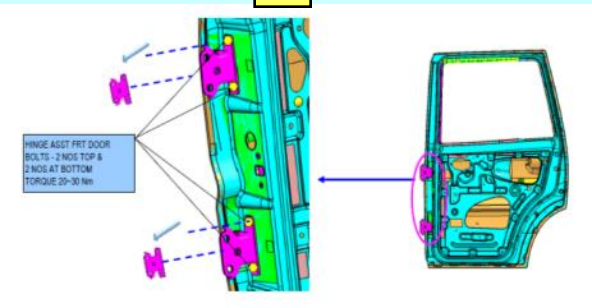

RH Rear door with Hinge assy

Process flow of Front Door fitment

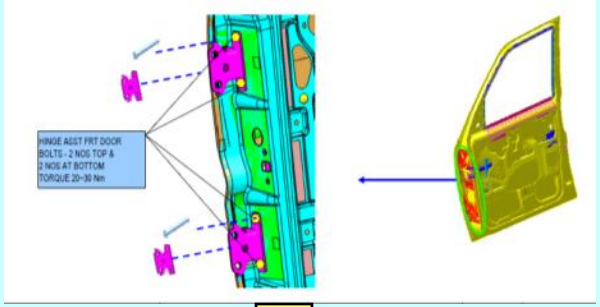

LH Front door with Hinge assy

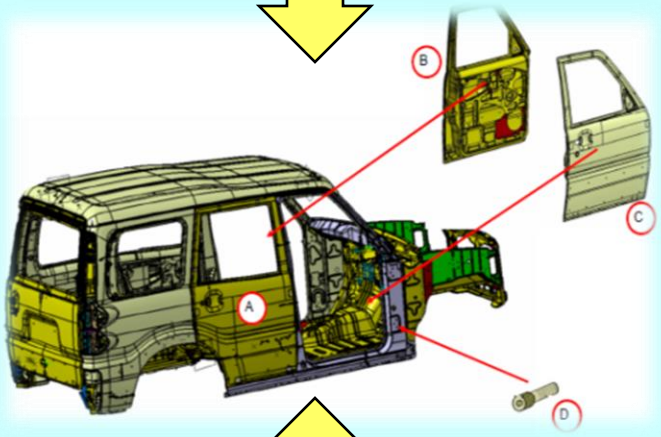

Main Body Frame

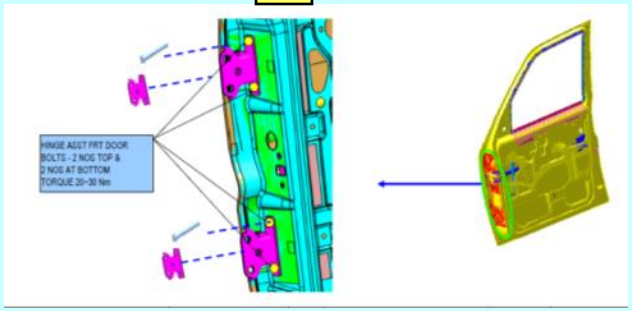

RH Front door with Hinge assy

Process Flow Diagram

Rear Door fitment

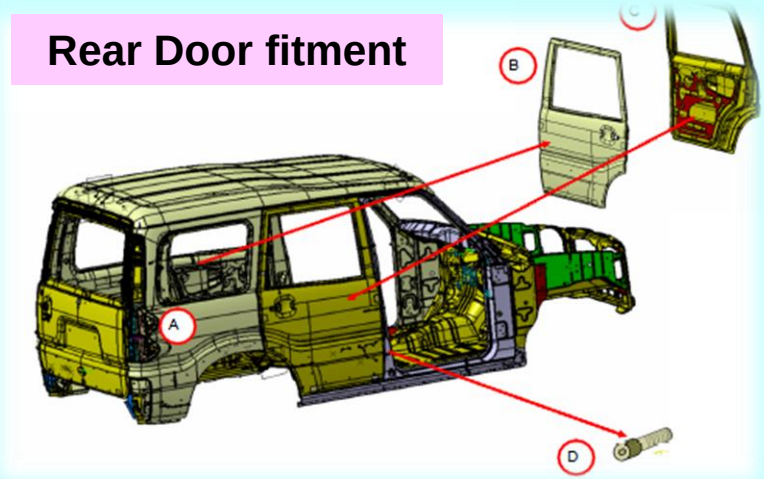

Front Door fitment

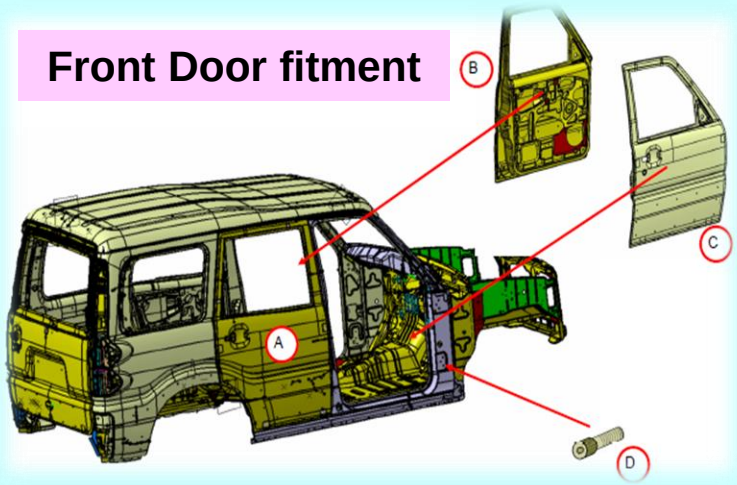

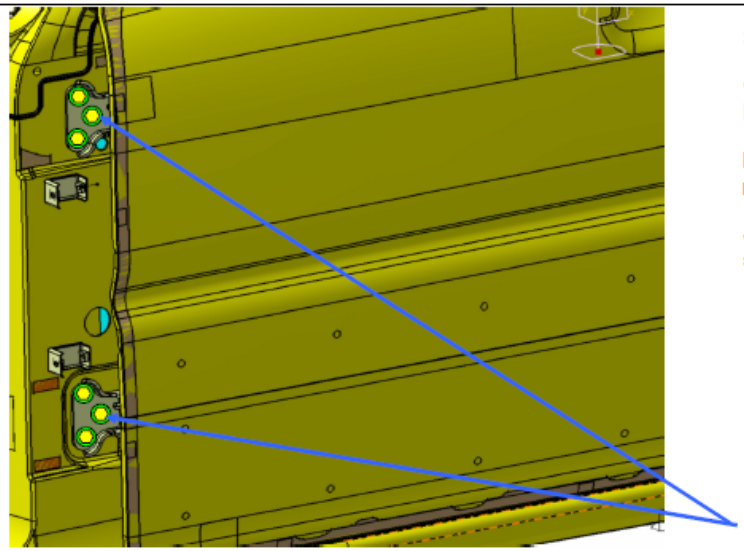

SPECIFIATIONS:-

GAP => 6 +/-1.0 mm
RESTRCICTION - 1 mm

FLUSHNESS=> 0 +/-1.0 mm

JOINT TORQUE RANGE => 20-30NM

MANUALLY TORQUE USING TONICHI BREAK BACK TORQUE WRENCH - 20~30NM

Product Requirement

3. Understand the current situation

LH/RH Rear Door fitment fixture

LH Door

RH Door

3. Understand the current situation

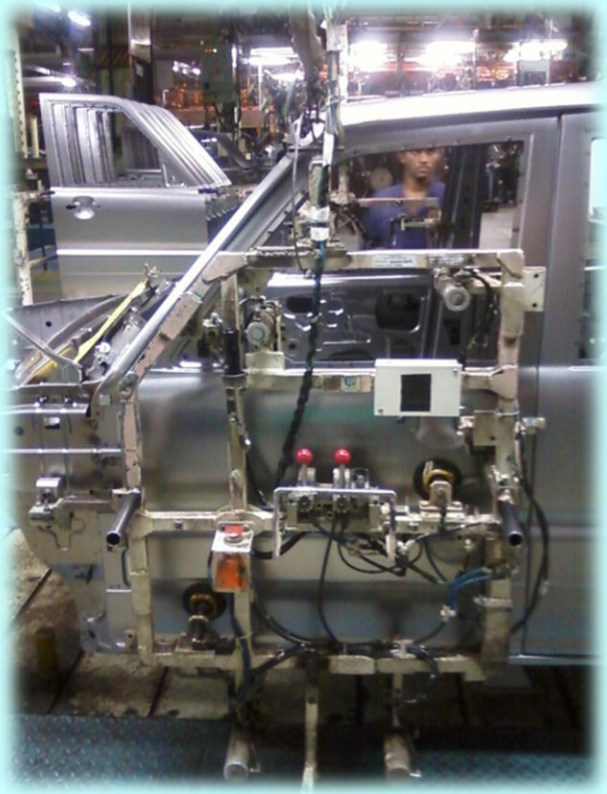

LH/RH Front Door fitment fixture

LH Door

RH Door

Step 3. Understanding the problem

D. COPQ (Cost of Poor Quality) Calculation

Description	May-12	June-12
Number of pieces rejected last month (for the part number identified for study)	– – –	– – –
Number of pieces scrapped last month (HEX SCREW M8X1.25X55)	– – –	– – –
Number of pieces(Vehicle) reworked last month	463	362
Part cost/piece	– – –	– – –
Rework cost/piece(Vehicle) Including (Labor Cost)	15794	13756
Total scrap cost (Rs.) for last month	– – –	– – –
Total rework cost(Rs.) for last month	15794	13756
Total Rejection cost (Rs.) for last month (Part Cost + Total rework cost)		
Extrapolated Total rejection cost (Rs. for one year) (Average of 2Month-(29550) Total-12Nos	177300.00 one Year	

4. Select Target

Identify the target. A target is a number indicating the level of improvement to be achieved.

Present Level:	463 nos based on average per month(Data collected from last 8 months)
Target:	**Reduction of uneven Gap Front door to rear door And Rear door to 'C' pillar LH/RH side by 80% at final body buyoff end of month OCT.12**

5. Analysis

Brain Storming:

Sr No	All Possible Cause
1	Hinge Reinforcement weld shift
2	Hinge mismatched (hinge fitment with door improper)
3	Door not proper locked in fixture
4	Unskilled operator
5	Fixture resting pads are loose
6	fixture locating pin & Pads worn out
7	Fixture Balancing not ok

5. Analysis

5.1 Identify possible causes:

Sr No	All Possible Cause
8	Burr in all door outer panel handle key slot & wheel house reinforcement Bkt. hole
9	Door suction cup not working
10	Rear door fixture adjustable cylinder pin loose
11	Insufficient spacer for front door to rear door
12	Front door single locating with body

5. Analysis

5.1 Identify possible causes:

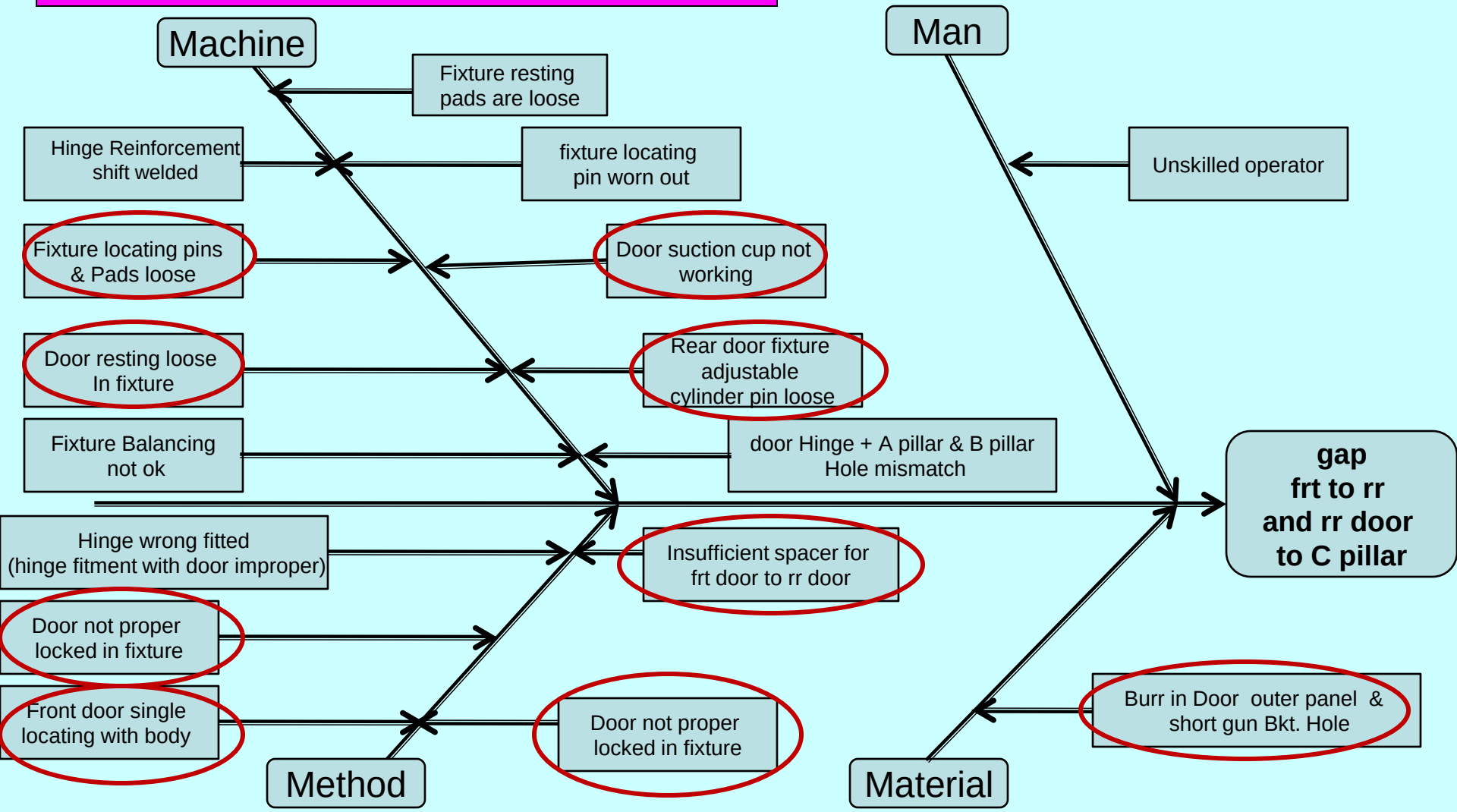

Cause Verification

5.2 Confirm the probable cause:

Sr No	All Possible Cause	Hypothesis	Conclusion
1	Hinge Reinforcement weld shift	Check 100 doors . all are door ok	INVALID
2	Hinge mismatched (hinge fitment with door improper)	Check 100 doors . all are door ok	INVALID
3	Door not proper locked in fixture	Check 100 doors ,found 100% concern during fixture loading	VALID
4	Rear door fixture adjustable cylinder pin loose	After 150-180 fitment door .we getting pin loose	VALID
5	Fixture resting pads are loose	All resting Pads mount with single bolt	VALID
6	Fixture locating pin & Pads worn out	Condition found not ok during fixture checking	VALID
7	Unskilled operator	Third party observation done & found some Operators not following SOS	INVALID

Cause Verification

5.2 Confirm the probable cause:

Sr No	All Possible Cause	Hypothesis	Conclusion
8	Burr in all door outer panel handle key slot & wheel house reinforcement Bkt. hole	Fixture pin not going properly in wheel house reinforcement bkt. Hole & fixture not fit with body	VALID
9	Door suction cup not working	Suction cup found not working condition	VALID
10	Insufficient spacer for front door to rear door	Front door to rear door gap variation found more than Spec- 6+/-1 mm Taper- 1mm top to bottom	VALID
11	Front door single locating with body	Movement is there in door after Locking the fixture to BIW (front door over lap with rear door)	VALID
12	Fixture Balancing not ok	Check all fixture balance found ok	INVALID

TEST OF HYPOTHESIS

5.2 Confirm the probable cause:

No	Probable Cause	Testing and Observations	Conclusion
1.	Door not properly locked in fixture	**we are checking 100 door . All** doors not properly inserted into the fixture & Locating pin stucking into the door	**Valid**

100% burr found in handle slot area at all outer panel

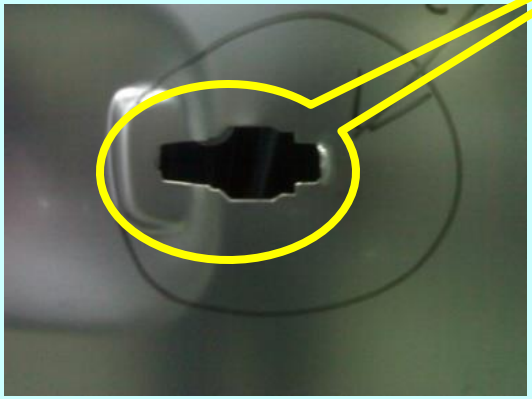

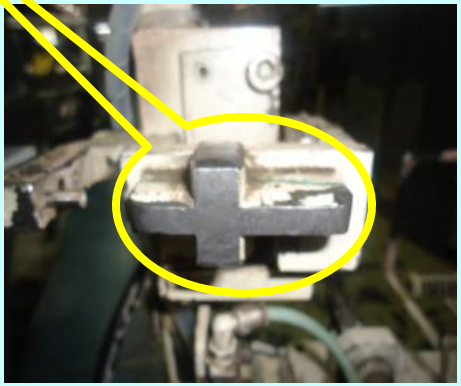

TEST OF HYPOTHESIS

5.2 Confirm the probable cause:

No	Probable Cause	Testing and Observations	Conclusion
2	Door resting loose in fixture at **bottom**	Door not hold into the fixture at bottom No any provision at bottom to hold the door	**Valid**

Before

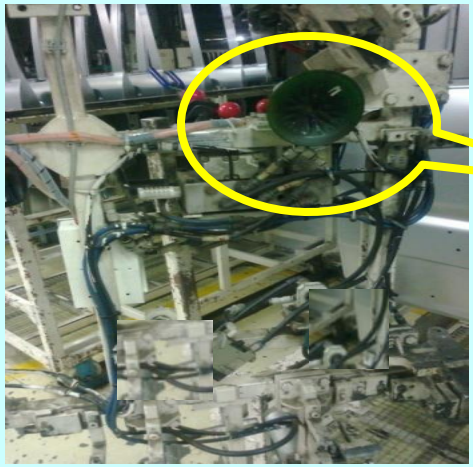

Single suction cup provided at top in All door setting fixtures

TEST OF HYPOTHESIS

5.2 Confirm the probable cause:

No	Probable Cause	Testing and Observations	Conclusion
3	Front door single locating with body	Single pin locating with respect to body & No access for another locating . Design issue	Valid

Before

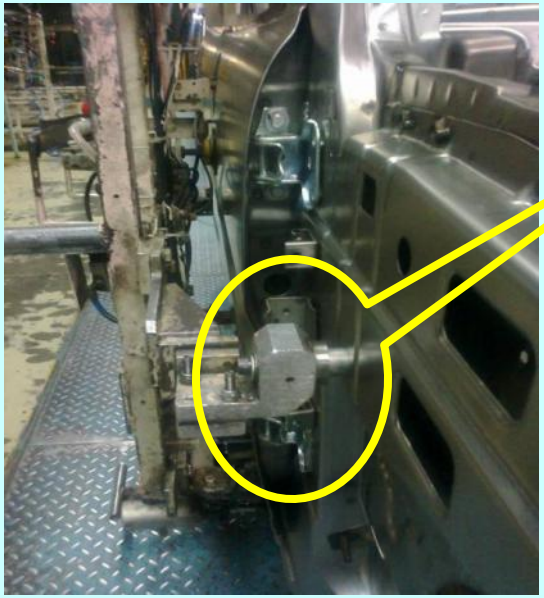

Single pin locating with respect to body

TEST OF HYPOTHESIS

5.2 Confirm the probable cause:

No	Probable Cause	Testing and Observations	Conclusion
4	Insufficient spacer for front door to rear door	No provision in fixture & **That** Point not considered in fixture design	**Valid**

Before

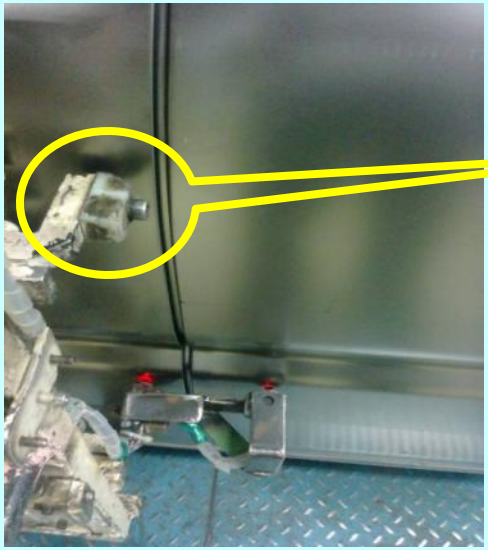

No provision in fixture & **That** Point not considered in fixture design .front door to rear door Spec- 6+/-1 mm Taper- 1mm top to bottom not maintain .

TEST OF HYPOTHESIS

5.2 Confirm the probable cause:

No	Probable Cause	Testing and Observations	Conclusion
5	Rear door fixture locating pins loose	Pin locating inside the cylinder not correct & Less guide to the pin inside the cylinder . Incorrect pin design	**Valid**

Before

Pin locating inside the cylinder not correct
& Less guide to the pin inside the
cylinder . Incorrect pin design

TEST OF HYPOTHESIS

5.2 Confirm the probable cause:

No	Probable Cause	Testing and Observations	Conclusion
6	Fixture resting pads are loose & door resting Not proper .	No proper holding to the pads **&** No provision for additional holding to the pads	**Valid**

Before

No proper holding to the pads **&** No provision for additional holding to the pads More gap with door panel to resting pad

WHY - WHY Analysis

5.3 Identify the root causes:

Sr No	Probable cause	Why 1	Why 2	Why 3	Why 4
1	**Door not properly locked in fixture**	door not properly inserted into the fixture	Locating pin stucking into the door	Improper entry of the fixture pin	
2.	**Fixture locating pins loose**	Pin locating inside the cylinder not correct	Less guide to the pin inside the cylinder	Design constraint	
3	**Door resting loose in fixture at bottom**	Door not hold into the fixture at bottom	No any provision at bottom to hold the door		

WHY - WHY Analysis

5.3 Identify the root causes:

Sr No	Probable cause	Why 1	Why 2	Why 3	Why 4
4	**Fixture resting pads are loose**	No proper holding to the pads	Mounting on a single bolt	No provision for additional holding to the pads	
5	**Door resting pad worn out**	Prolong use of pads	No pad surface checking frequency decided	Point not addressed in PM check sheet	
6	**Door suction cup not working**	Suction cup worn out	Prolong use of suction cups	No cup surface checking frequency decided	Point not addressed in PM check sheet

WHY - WHY Analysis

5.3 Identify the root causes:

Sr No	Probable cause	Why 1	Why 2	Why 3	Why 4
7	**Front door not locating with body**	Single pin locating with respect to body	No access for another locating	No provision for additional locating into the fixture	
8	**Insufficient spacer for front door to rear door**	No provision in fixture	Point not considered in fixture design		

6. Implement the corrective measures

6.1 Actions Decided

Root Cause	Action Plan	Target Dt	Resp.	Status
1.Door not properly locked in fixture	100% outer panel checked by press shop end & send ok parts and chamfer provided at handle slot pin in all fixture	20/7/12	Press shop / jagveer singh	Complete

Before

100% checked by press shop end & send ok parts and chamfer provided at handle slot pin

After

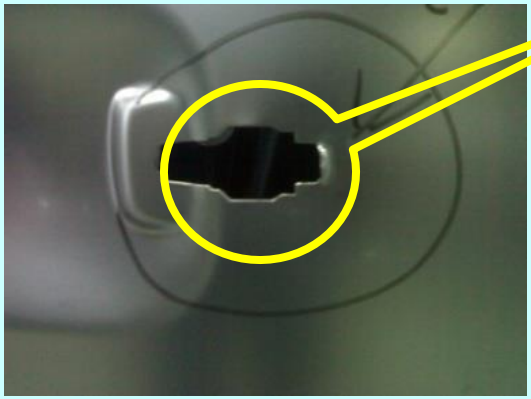

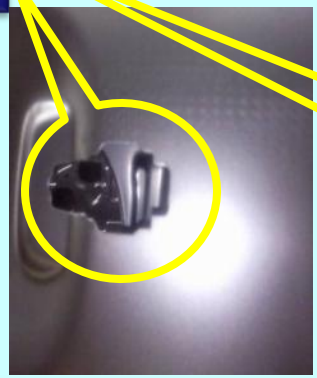

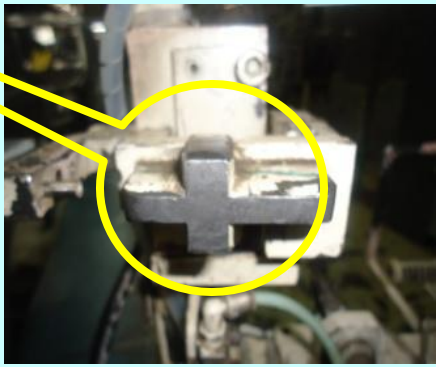

6. Implement the corrective measures

6.1 Actions Decided

Root Cause	Action Plan	Target Date	Resp.	Status
2.Rear door Fixture adjustable locating pins loose	Increase Pin length & Guide to avoid play of pin	30/7/12	Vivek Bhat	Complete

Before

Increase
Pin length
& Guide to avoid
excess play of pin
with Body

After

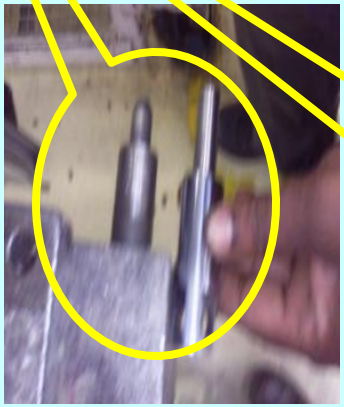

6. Implement the corrective measures

6.1 Actions Decided

Root Cause	Action Plan	Target Dt	Resp.	Status
3.Door resting loose in fixture at bottom	Additional 02 suction cup provided at bottom in All door setting fixtures	22/07/12	Vivek Bhat / Jagveer singh	Complete

Before

Additional 02 nos suction cup provided at bottom in All door setting fixtures

After

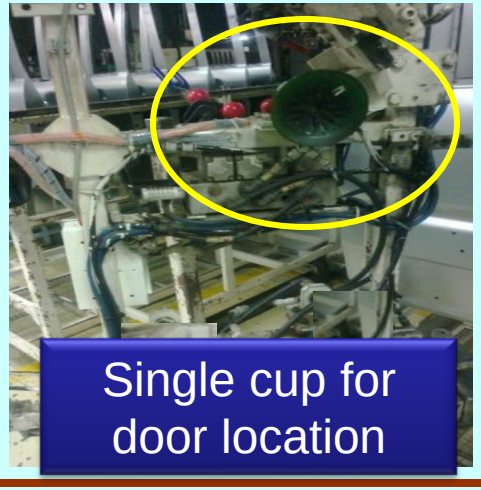

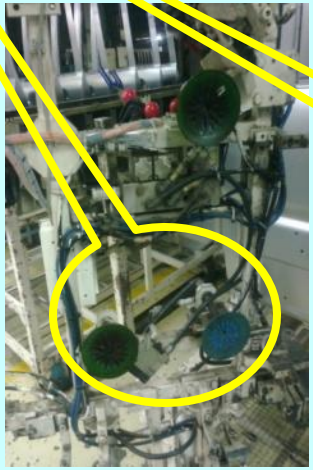

6. Implement the corrective measures

6.1 Actions Decided

Root Cause	Action Plan	Target Dt	Resp.	Status
4.Fixture resting pads are loose & door resting Not proper .	All Door resting pads are corrected according to door gap & Additional Dowel provided	28/8/12	Vivek / Jagveer	Complete

Before

All Door resting pads are corrected according to door gap & Additional Dowel provided

After

6. Implement the corrective measures

6.1 Actions Decided

Root Cause	Action Plan	Target Dt	Resp.	Status
5. Door resting pad worn out	Worn out resting pads are replaced with new one and its checking plan is made for PM	28.07.2012	Vivek /Jagveer	Closed

Before

Worn out resting pads are replaced with new one

After

6. Implement the corrective measures

6.1 Actions Decided

Root Cause	Action Plan	Target Dt	Resp.	Status
6.Door suction cup not working	Worn out suction cups are replaced with new one and its checking plan is made for PM	28.07.2012	Vivek /Jagveer	Closed

Before

Worn out suction cups are replaced with new one

After

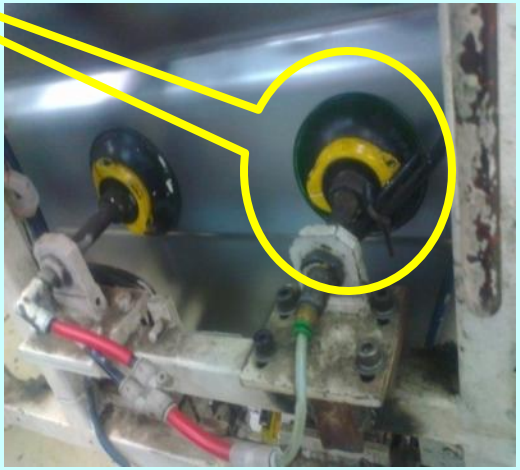

6. Implement the corrective measures

6.1 Actions Decided

Root Cause	Action Plan	Target Dt	Resp.	Status
7.Front door single locating with body	Double Locating provided with the body of provision done in front door fixture	18/08/12	Vivek / jagveer	Complete

Before

Double Locating provided with the body of provision done in front door fixture

After

6. Implement the corrective measures

6.1 Actions Decided

Root Cause	Action Plan	Target Dt	Resp.	Status
8.Insufficient spacer for front door to rear door	Additional Spacer provided at front door fixture for maintain gap front door to rear door Spec- 6+/-1 mm Taper- 1mm top to bottom	24/8/12	Vivek / Jagveer	Complete

Before

Additional Sapcer provided at front door fixture for maintain gap front door to rear door Spec- 6+/-1 mm Taper- 1mm top to bottom

After

7. Check & confirm the results & effects

7.1 Verify Results:

1.Additional 02 suction cup Provision for door setting fixture

2. Locating pin modification – Both rear door setting fixture

1.Double locating pin provide on both Front door setting fixture

All Door resting pads are corrected according to door gap & Additional Dowel provided

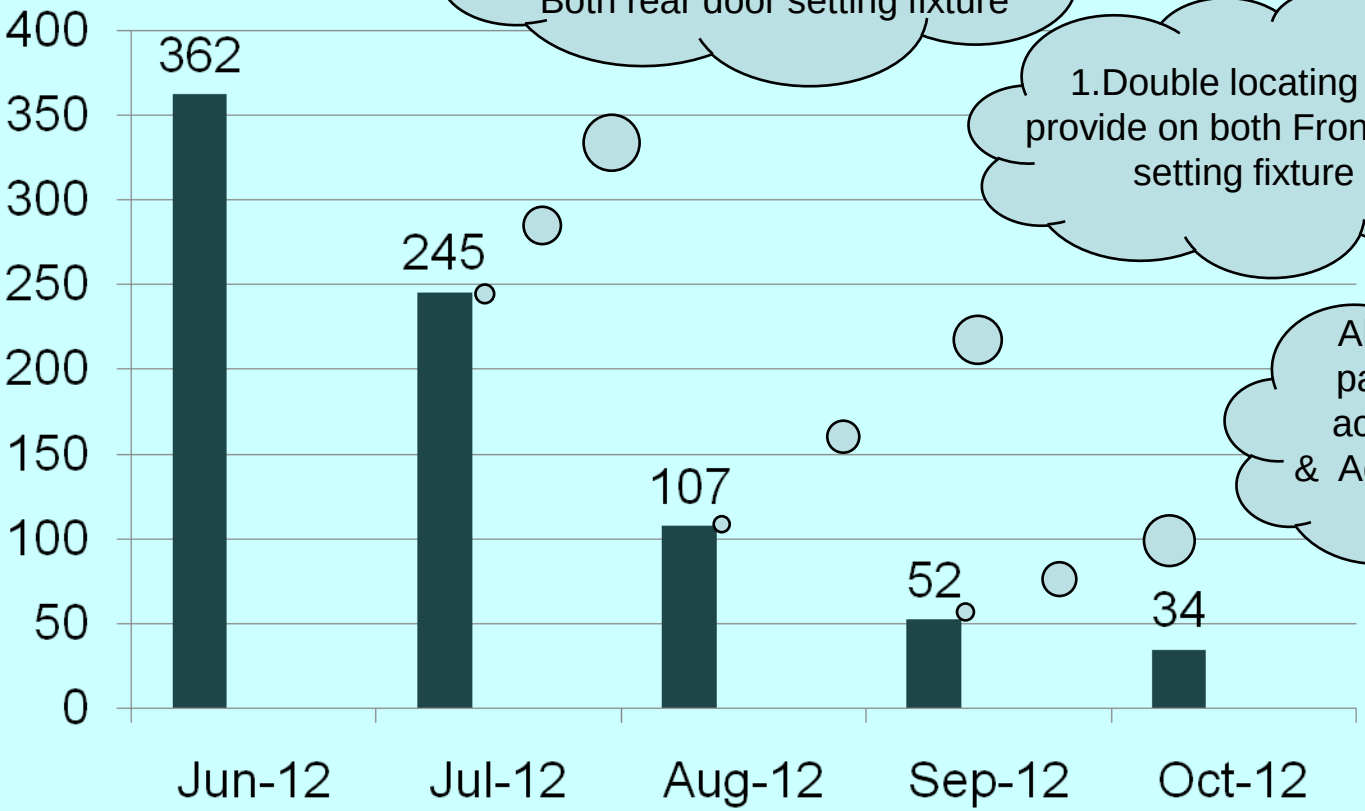

7. Check & confirm the results & effects

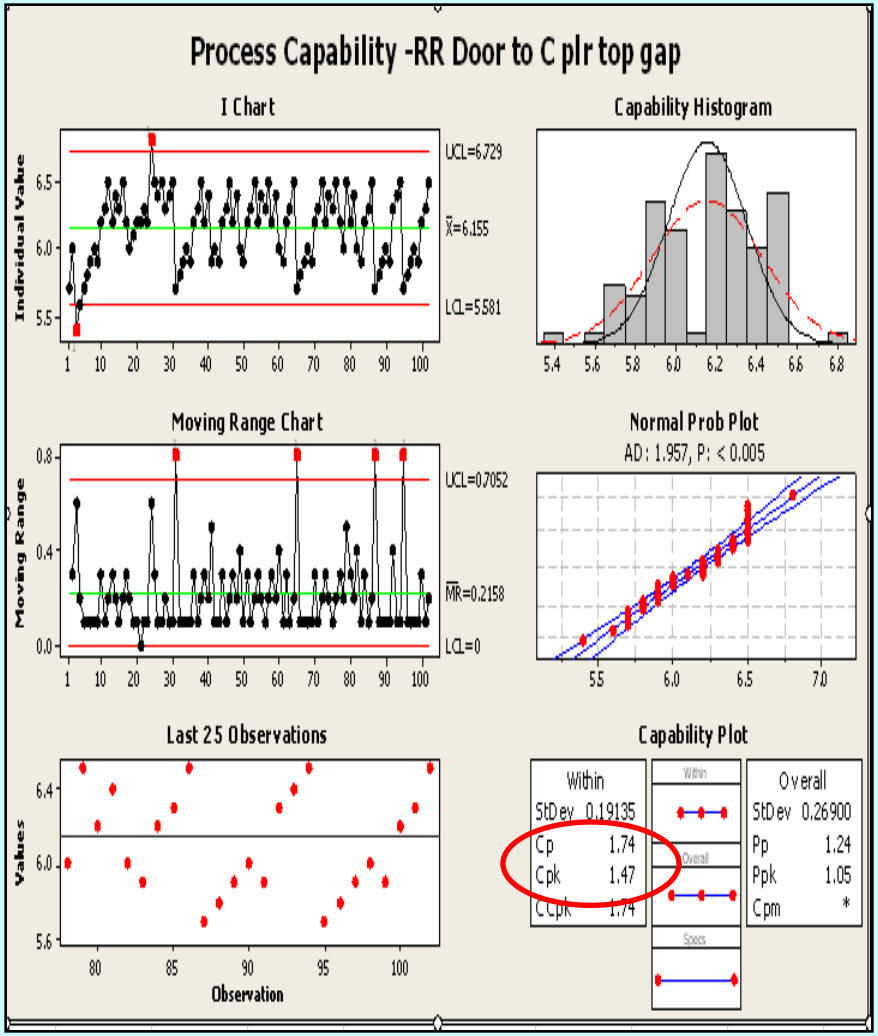

Cp & Cpk Value Rear door to C plr at Top

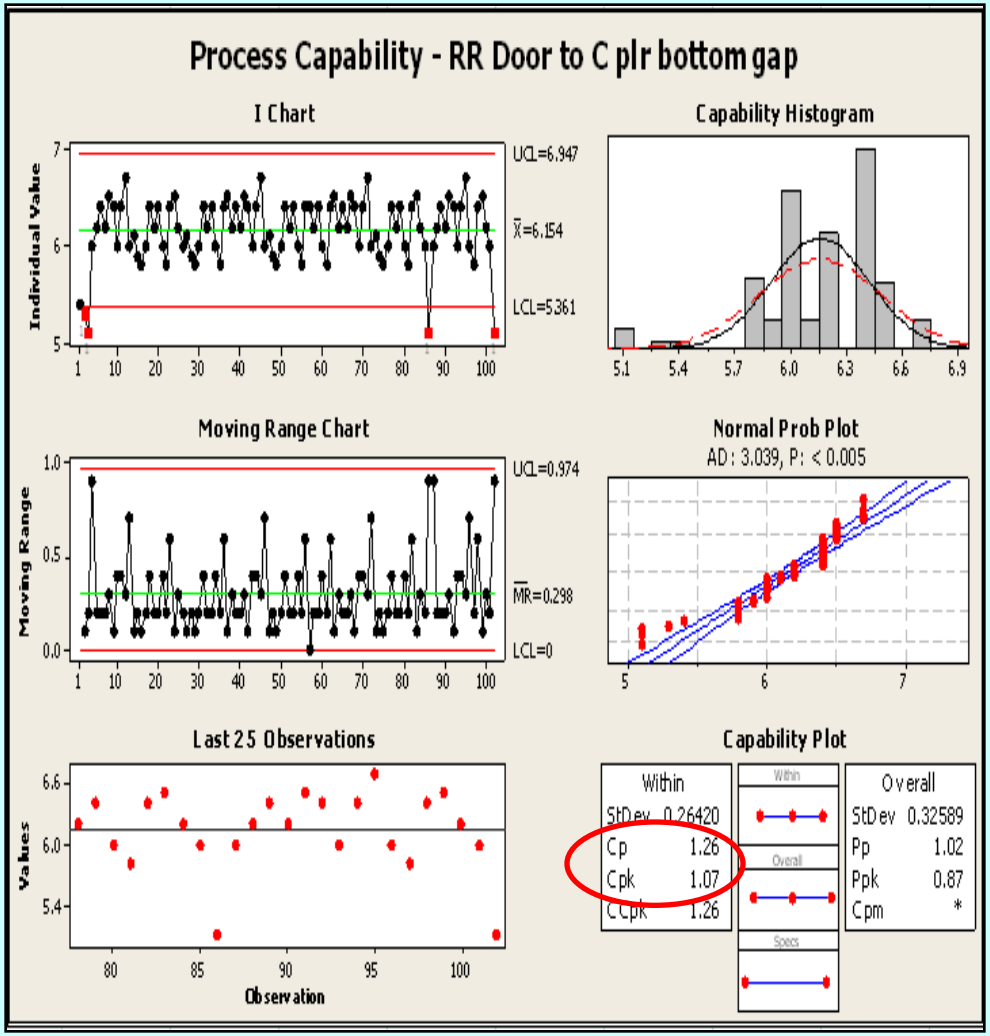

Cp & Cpk Value Rear door to C plr at Bottom

7. Check & confirm the results & effects

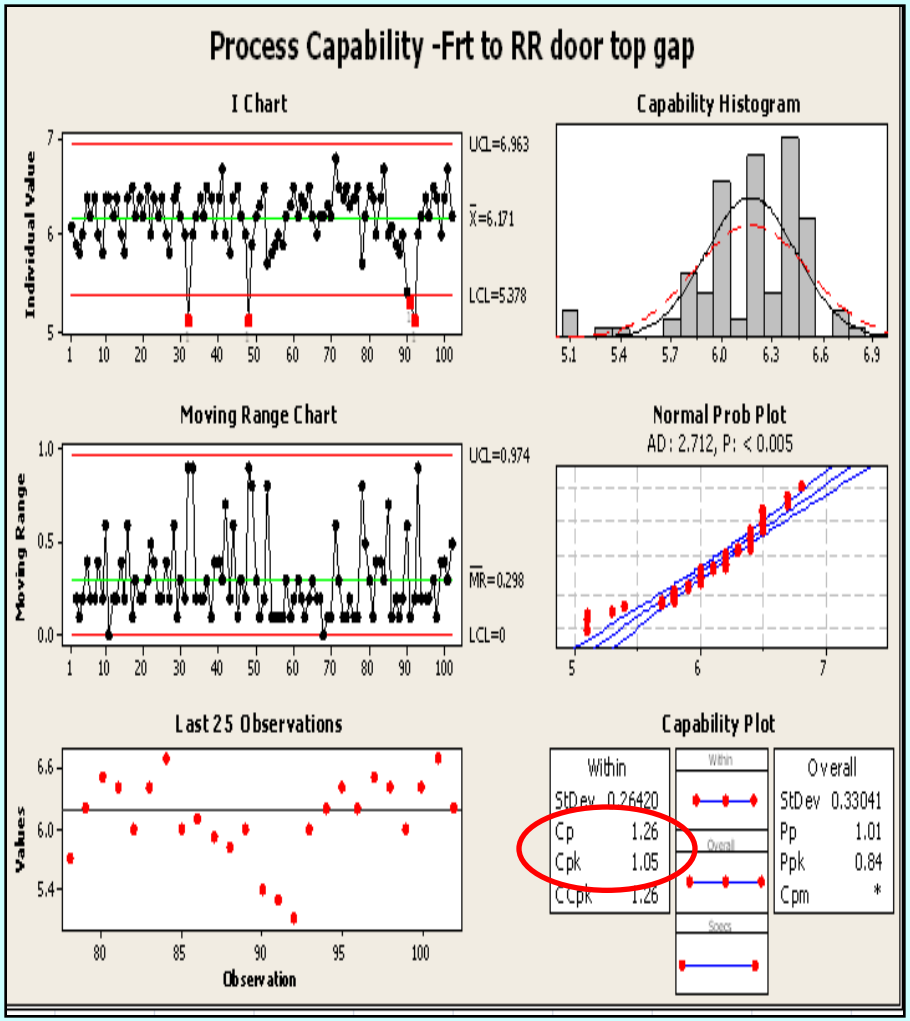

Cp & Cpk Value Frt. to RR door at Top

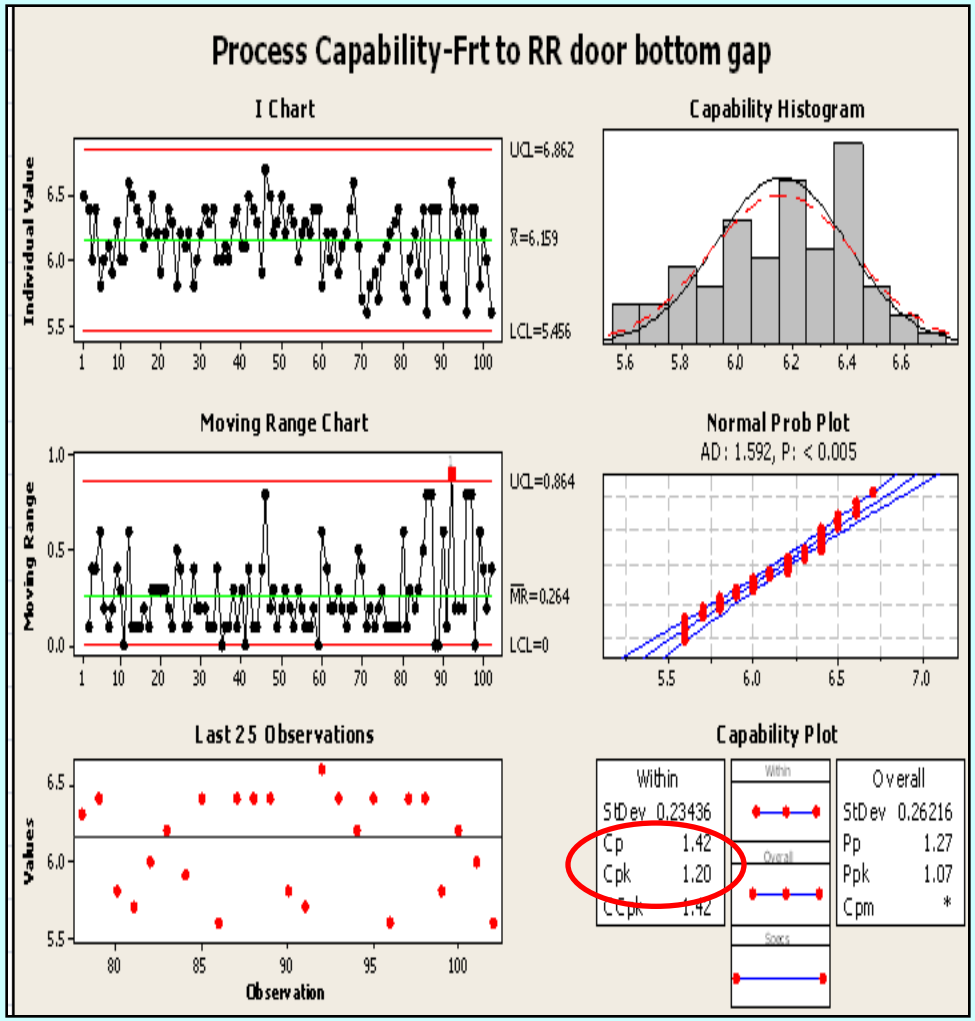

Cp & Cpk Value Frt. to RR door at Bottom

7. Check & confirm the results & effects

7.2 Full Scale Implementation plan:

1.All decided actions implemented as on 25.10.2012

2. Effectiveness of actions has been audited on 28.10.2012 by MQA team

3. For reducing overall Alignment concern, next phase is planned up to 31.03.2013

Check & confirm the results & effects (Cont……)

7.3 Tangible benefits:

1.Front door to rear door & Rear door to 'C' plr. Lh / Rh Gap incidences reduced from 463 per month to 34 per Month

2. 193 incidences at Buy off from last 3 months.

3. Cost saving benefits :
Saving in Rework cost = **Rs. 160428 / Year**

Total Cost saved = Rs. 160428 /Year

Check & confirm the results & effects (Cont……)

7.3 Intangible benefits:

Team Morale , Team Work & confidence level to solve chronic concern is improved substantially.

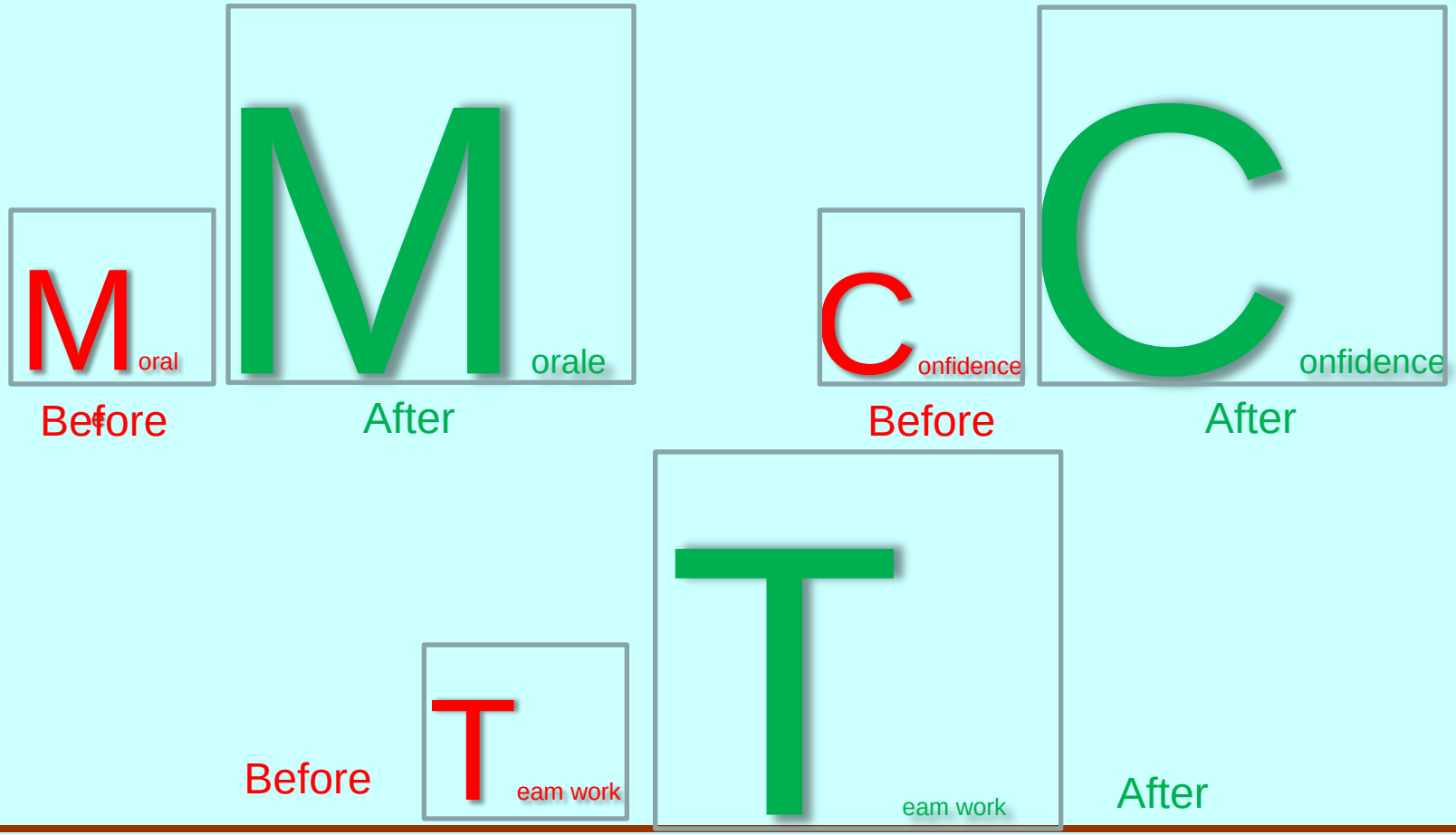

8. Standardisation

8.1 Updation of documents:

1.Fixture History Card

2. PM check sheet ,which is attached in down slides 3.SOS

M & M Ltd. Automotive Sector Nashik	QUALITY MANAGEMENT SYSTEM CHECK LIST	Dept : Mfg. Engg Page: 01 of 01
	TITLE : Preventive Maintenance of Fixtures- Finishing	
1.PURPOSE:	To Ensure the Preventive Maintenance of Fixtures Carried-out Correctly.	
2.SCOPE :	All Closure assly Fixtures in Scorpio Body shop	
Assy Name:		Stage:
Fixture Name:		
Fixture No.		Date :-

Sr. No.	Check Points	Work Instructions	Status	Remark
1	Fixture cleaning.	Clean thoroughly all areas of Fixture (Resting points/location pins /Guides/clamps/base frame/valves etc.		
6	Locator/Resting block/Spacers/Nylon strips.	Check locator fitment.		
		Check for any breakage/wearout		
		Check for proper fitment of pins.		
		Check suction cup of door setting fixtures		
		Check for any breakage/wearout of pin		
		Check for magnet breakage & its magnetic power.		
		Applicable for all side door closure fixture		
		For all side door fixture ensure balencer setting 1)Load condition :2.6+\- o.2 Kg per cm sq. 2)Load condition :2.4+\- o.2 Kg per cm sq.		
7	Pneumatic cylinders	Check for fitment of cylinder bolts/bracket		
		Check hinge pin of cylinder for washer,cotter pin.		
10	POKA-YOKE	Check for POKA -YOKE points.		

Notes:- (Please write your observation / comment if any other than check points or work done on Fixture)

Operator Name :- Operator Signature :-

Stndy/MF/F/06 . Rev 2.20. Eff.20/09/2012

Page 1

8. Standardisation

8.2 Training :-

1. OJT for closure fitment stage operators.

2.SOS training

3. ILU training

8. Standardisation

8.3 Additional Audit / Check

1.Added check point in quality Check sheet (Check Man)

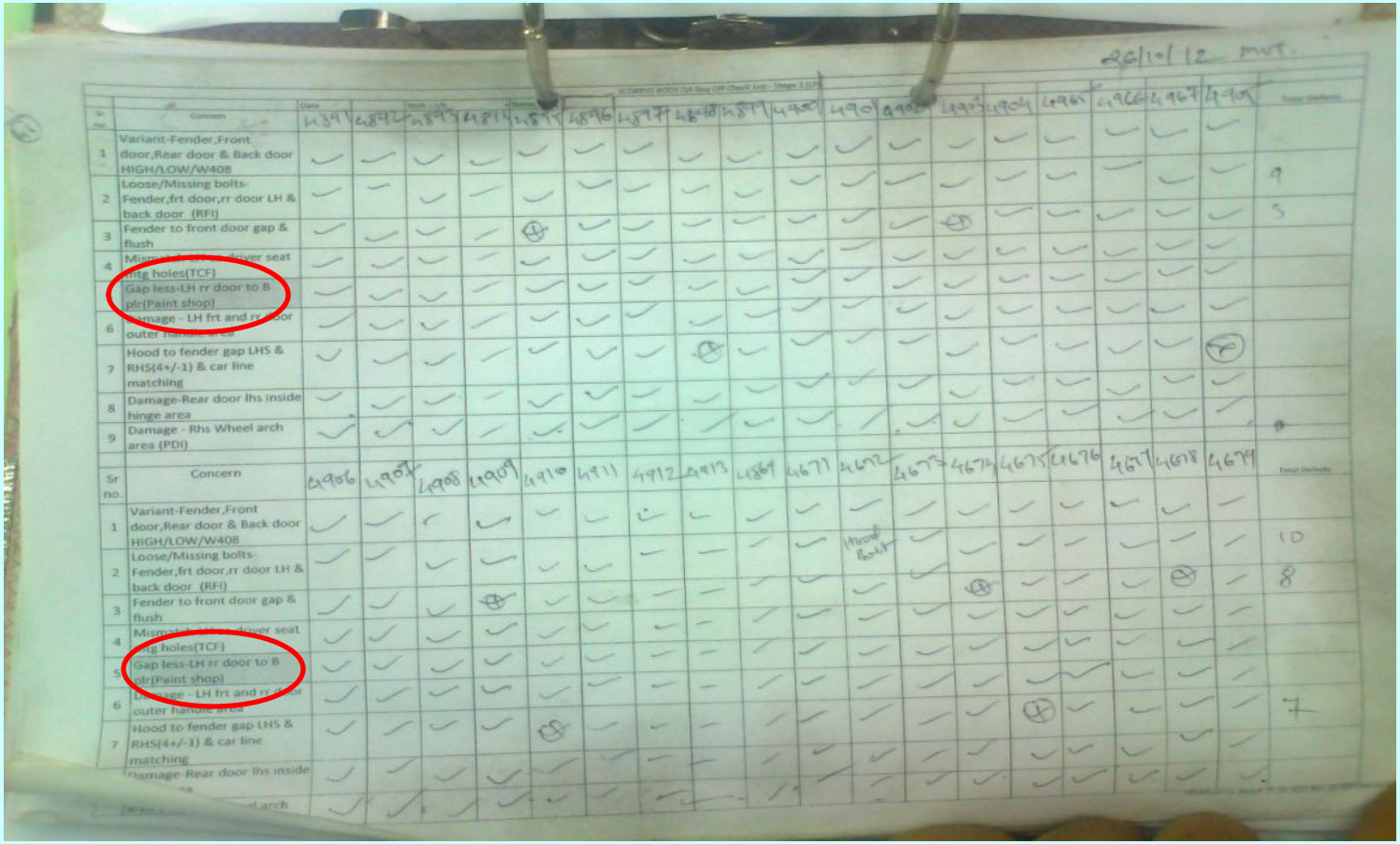

8. Standardisation

8.3 Additional Audit / Check

1.Added check point in Supervisor Check sheet

Closure Fitment SOS adherence

Sr No	Body No.	Operator	Pretightening	Bolt Sequence	Alignment	Remark
1	7224	NRK / P3L	OK	OK	OK	
2	7222	Rajesh / Singh	OK	OK	OK	OK
3	7226	SNE / Tukki	OK / OK	OK	OK	OK
4	7227	ABD / Vishwakarma	OK / OK	OK	OK	OK
5	7228	NRK / P3L	OK	OK	OK	OK
6	7229	Rajesh / Singh	OK	OK	OK	OK
7	7230	SNE / Tukki	OK	OK	OK	OK
8	7231	ABD / Vishwakarma	OK	OK	ABD OK	V. Bhaskarlalma not
9	7232	NRK / P3L	OK	OK	OK	OK
10	7233	Rajesh / Singh	OK	OK	OK	OK
11	7234	SNE / Tukki	OK	OK	OK	OK
12	7235	ABD / Vishwakarma	OK	OK	OK	OK
13	7236	SNE / Tukki	OK	OK	OK	OK
14	7237	Raj / Singh	OK	OK	OK	Fitment found to be OK
15	7238	SNE / Tukki	OK	OK	OK	OK
16	7239	ABD / Vishwakarma	OK	OK	OK	OK
17	7240	NRK / P3L	OK	OK	OK	OK
18	7241	Rajesh / Singh	OK	OK	OK	OK
19	7242	SNE / Tukki	OK	OK	OK	OK
20	7243	ABD / Vishwakarma	OK	OK	OK	OK
21	7244	NRK / P3L	OK	OK	NRK OK / OK	NRK - Fitment not
22	7246	Rajesh / Singh	OK	OK	OK	
23	7247	SNE / Tukki	OK	OK	OK	
24	7247	ABD / Vishwakarma	OK	OK	OK	
25	7248	NRK / P3L	OK	OK	OK	
26	7250	SNE / Tukki	OK			
27	7251	ABD / Vishwakarma	OK	OK	OK	
28	7252	NRK / P3L	OK	OK	OK	
29	7253	Rajesh / Singh	OK	OK	OK	
30	7254	SNE / Tukki	OK	OK	OK	
31	6281	ABD / Vishwakarma	OK	OK	OK	
32	6282	NRK / P3L	OK	OK	OK	
33	6283	Rajesh / Singh	OK	OK	OK	
34	6284	SNE / Tukki	OK	OK	OK	
35						
36						
37						
38						
39						
40						

9. Summarise & Plan future actions

9.1 Conclusion:

An innovative approach and team work by doing GEMBA study can lead to elimination of such chronic concerns.

QC story methodology is Highly recommended for resolving chronic concerns.

As against the Target of 80% reduction ,team have achieved 90 % reduction in incidences. Thus Target Achieved .

Help required to achieve further results:-

1)Door Hinge design to be modified like Xylo & Verito.

2) Complete new set of fixture will required like Xylo & Verito.

3) For Body positioning stud on 'A' & 'B' required to have correct closure positioning like Xylo & Verito.

4) Hinge modification with Better strength require.

9. Summarise & Plan future actions

9.2 Horizontal Deployment:

1.Hood to Fender Gap.

2.Back door Gap

3. Fender to Front door Gap

9. Summarise & Plan future actions

9.3 Lessons Learnt:

Things Gone Wrong :

1.Initially dependency of resolving the concern on SQA only; thus no CFT approach resulting into unsustainable results.

2. Budgetary provision on reactive mode resulting into loss of huge time span.

Things Gone Right :

1.Always challenge given inadequate process leading to innovative ideas thoughtfully implemented

2.Human Error Prevention

3.Resolution of Chronic Concern with the QC story methodology

4. CFT approach with GEMBA culture is very helpful in resolving chronic concern.

Thank You……MQS TEAM